SKARV
SONAR HANDLING

LIDAN
LIFTING YOU
Since 1909

NANNOSKARV

THE SKARV SYSTEM

Lidan SKARV products are a new evolution of Launch and Recovery Systems.
Today the SKARV is available in 4 sizes, with a tow capacity up to 18 kN.

Designed for payloads up to a length of 3000 mm and a weight of 375 kg.

The SKARV is a complete Launch and Recovery System that combines Winch & Launch-Frame with a docking saddle. During towing operation the docking saddle is raised out of the water.

USV´s comes with high demands on light weight, minimum foot print and reliability. Lidan Marine is working with leading USV manufacturing companies to deliver LARS equipment to meet the latest technology. The equipment is designed to be ship integrated on e.g. USV's, and to be remotely operated.

The NannoSKARV is a complete Launch and Recovery System that combines Winch and Launch Frame with docking unit. It will fit between the hulls or over the transom of smaller vessels.

Can also be delivered as a turnkey solution including coaxial cable, mechanical and electrical termination with slipring.

– EASY INSTALLATION
– SAFETY FOR PERSONNEL AND SONAR
– LIGHT WEIGHT AND MODULAR
– USV READY

READ MORE @
www.lidanmarine.com

+46 (0)510 54 50
info@lidanmarine.com
Lidköping - SWEDEN

NANNOSKARV

SKARV
SONAR HANDLING

LIDAN
LIFTING YOU
Since 1909

TECHNICAL SPECIFICATION

Weight:	Cable dia:	Capacity:	Line speed (avg.):	SWL:	WLL:
125 kg Excl. cable and sonar	6,53 mm	300 m	30/60 m/min Depending on gearbox	50/80 kg Depending on gearbox	100 kg Towing up to 45° angle

Power supply:	24 VDC up to 1 kW	Cable:	6,53 mm Rochester A304874
Winch drive:	800W S2 cycle Encoder for cable scope	Communication:	Ethernet OPC UA protocol for remote control
Levelwind:	Belt driven pinch roller type adapted to cable	Slip ring:	Designed for Focal 180 type or similar
Frame drive:	24 VDC Actuator IP68-IP69 (1,0 m -1 h)	Ingress protection:	IP66 (COTS) IP68 (1,2 m - 2 h) (Electrical cabinet)

The NannoSKARV is supplied as standard with Launch Frame including Winch TW-L:

- Anodized Marine Aluminium
- Handheld wireless remote
- 12 Month Warranty
- Torque Limiter
- Operations Manual
- Maintenance Manual

Available options:

- Turnkey solution
- Remote software and HMI
- Marine grade paint
- Customized solution
- Spare parts
- Beacon and buzzer

ARM IN LOWER POSITION – DOCKING

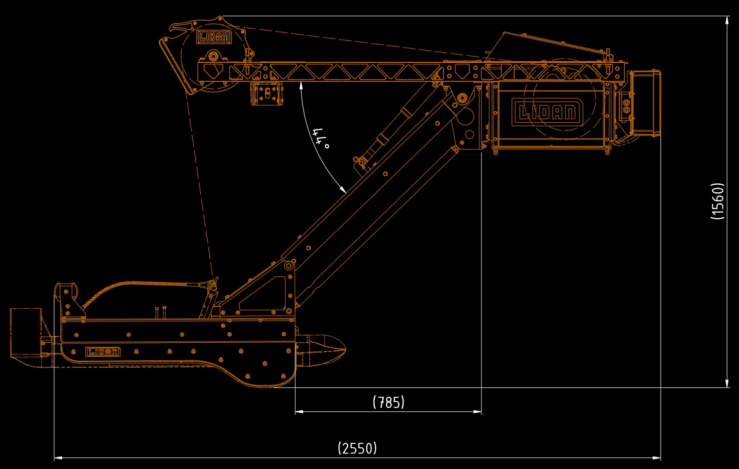

Deck interface

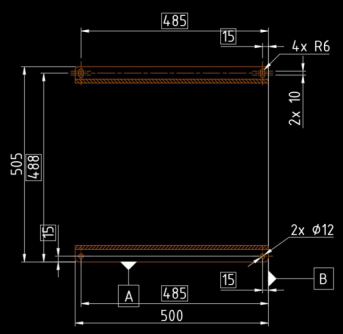

Docking saddles adapted for – Klein MA-X VIEW 600 / 4K-SVY – Edgetech 4125i – Edgetech 4205
Other types on request. Also available for sonar with Depressor.

Part of
Sepson
Winch Group